Product Data Sheet

GW26421

27 COMBI Range

A complete, versatile system of modular containers, perfectly integrable in the SYSTEM domestic range and able to meet the high protection installation requirements of the residential, commercial and industrial sectors. The 27 COMBI range is available both in the IP40 version and in watertight versions with IP55, IP65 and IP66 degree of protection, recommended for all outdoor applications which are subjected to extreme atmospheric conditions.

Colour	Grey RAL 7035	IP degree	IP44
Insulation class	II	Outer dim. LxHxD (mm)	116x90x45
Rated voltage	400V ac	Rated current (A)	16
No. of poles	3P+E	Reference h	6
Glow Wire Test	650 °C	Thermo-pressure with ball	70 °C
Standard	IEC 309	Installation temperature	-25 +60 °C
Electrocod	2210		

BEHAVIOUR WITH CHEMICAL AND ATMOSPHERIC AGENTS

Saline solution	Acids		Bases		Solvents				Mineral oil	UV rays
	Concentrated	Diluited	Concentrated	Diluited	Hexane	Benzol	Acetone	Alcohol		
Resistant	Limited resistance	Resistant	Resistant	Resistant	Limited resistance	Not resistant	Not resistant	Not resistant	Limited resistance	Resistant

DIMENSIONAL

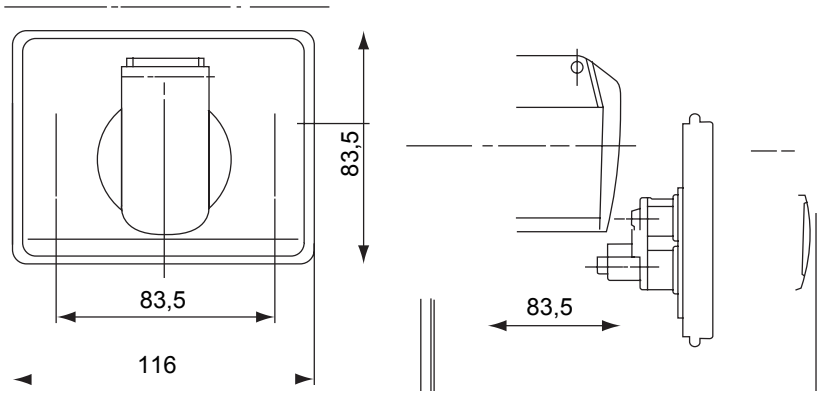

TECHNICAL SYMBOLOGY

STANDARDS/APPROVALS

CE

GEWISS S.p.A. Via A. Volta, 1
24069 Cenate Sotto - Bergamo - Italy
tel. +39 035 94 61 11 fax +39 035 94 69 09

www.gewiss.com
sat@gewiss.com
Last update 20/04/2023

Data, measures, designs and pictures are shown only as informative purposes, and could be changed without previous notice